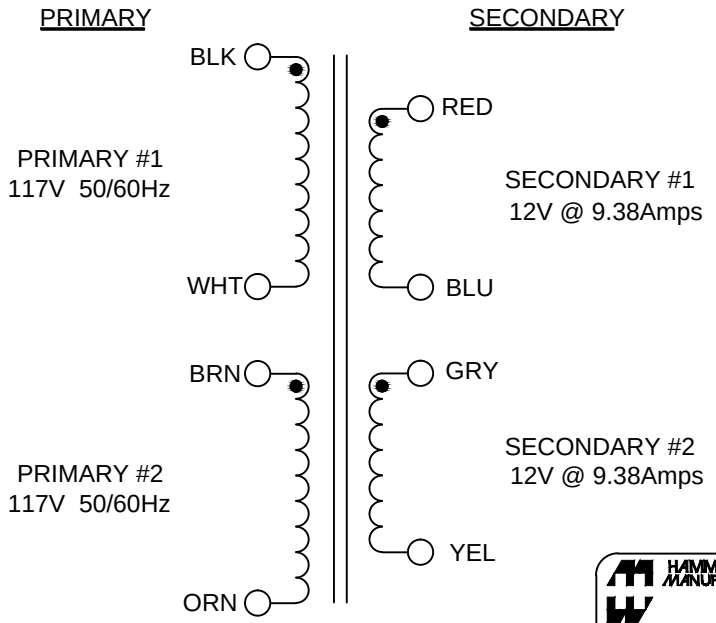

PRIMARY LEADS ARE #20 TEW

SECONDARY LEADS ARE #14 TEW

ALL LEADS OUT 8"-9" AND STRIPPED 0.5" MIN.

WEIGHT: 4.85Lbs +/- 4%

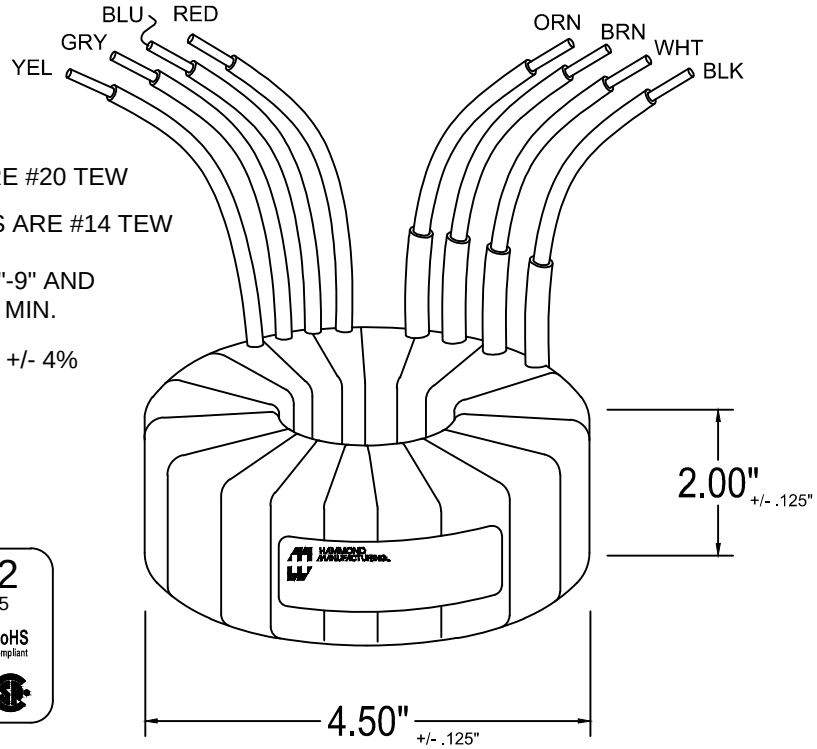

HAMMOND MANUFACTURING

1182S12

50/60Hz VA:225

PRI: 2x 117V BLK-WHT, BRN-ORN

SEC: 2x 12V @ 9.38A RED-BLU, GRY-YEL

RoHS Compliant

1A0225A000C012012

MADE IN CANADA DATE PB

ELECTRICAL DATA:

TESTS	CONDITIONS	ACCEPTANCE CRITERIA
Sec. N.L.V	@ 117V, 60Hz	
	BLK & BRN to WHT & ORN	
OR	@ 234V, 50Hz	
	BLK to ORN (Connect BRN & WHT)	
	RED - BLU	12.87 V ±2%
	GRY - YEL	12.87 V ±2%
POLARITY	BLK, BRN, RED and GRY.	ADDITIVE
DCR	BLK - WHT	2.850 Ohms ±20%
IN OHMS	BRN - ORN	2.850 Ohms ±20%
	RED - BLU	0.040 Ohms ±20%
	GRY - YEL	0.040 Ohms ±20%
HIPOT	PRIMARY - SECONDARY	4000V, 60Hz, 1 SEC
	PRIMARY - PRIMARY	600V, 60Hz, 1 SEC
	SECONDARY - SECONDARY	600V, 60Hz, 1 SEC

SUPPLIED WITH: TWO 0.062" T X 3.75" OD RUBBER WASHERS.
ONE 16GA X 3.56" OD STEEL MOUNTING WASHER.
ONE 1/4-20 BOLT 2.50" LONG WITH A LOCK WASHER AND 1/4-20 HEX NUT.

PROPERTY AND COPYRIGHT NOTICE

THIS DRAWING AND THE INFORMATION IT CONVEYS ARE THE PROPERTY OF HAMMOND MANUFACTURING. IT MAY NOT BE REPRODUCED, TRANSMITTED OR USED IN ANY MANNER WHATSOEVER WITHOUT THE WRITTEN PERMISSION OF HAMMOND MANUFACTURING.

REV	NOTES	BY	DATE

HAMMOND MANUFACTURING
ELECTRONIC DIVISION
52 RANKIN PLACE,
WATERLOO, ONTARIO, N2J 3Z5
PHONE: 519.886.6181 FAX: 519.886.9540

TOROID POWER TRANSFORMER

DRAWN	DATE	NUMBER
G. GRAY	21/03/2014	1182S12
APPROVED	DATE	