DRAWING MADE IN THIRD ANGLE PROJECTION

THIS DRAWING IS UNPUBLISHED. RELEASED FOR PUBLICATION ,19 .
© COPYRIGHT 19 BY AMP INCORPORATED. ALL INTERNATIONAL RIGHTS RESERVED.

| LOC | DIST | P | F | ZONE | LTR | DESCRIPTION | DATE | APPD |
|---|---|---|---|---|---|---|---|---|
| CM | 54 | | | | E | REV PER EC 0730-0092-94 | 5-17-94 | RV RS |

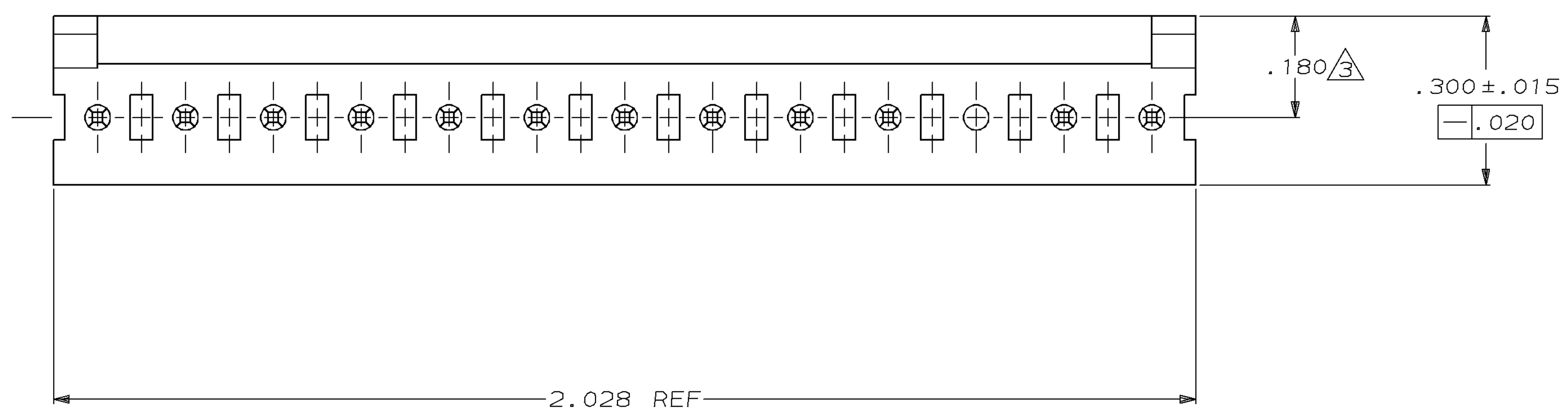


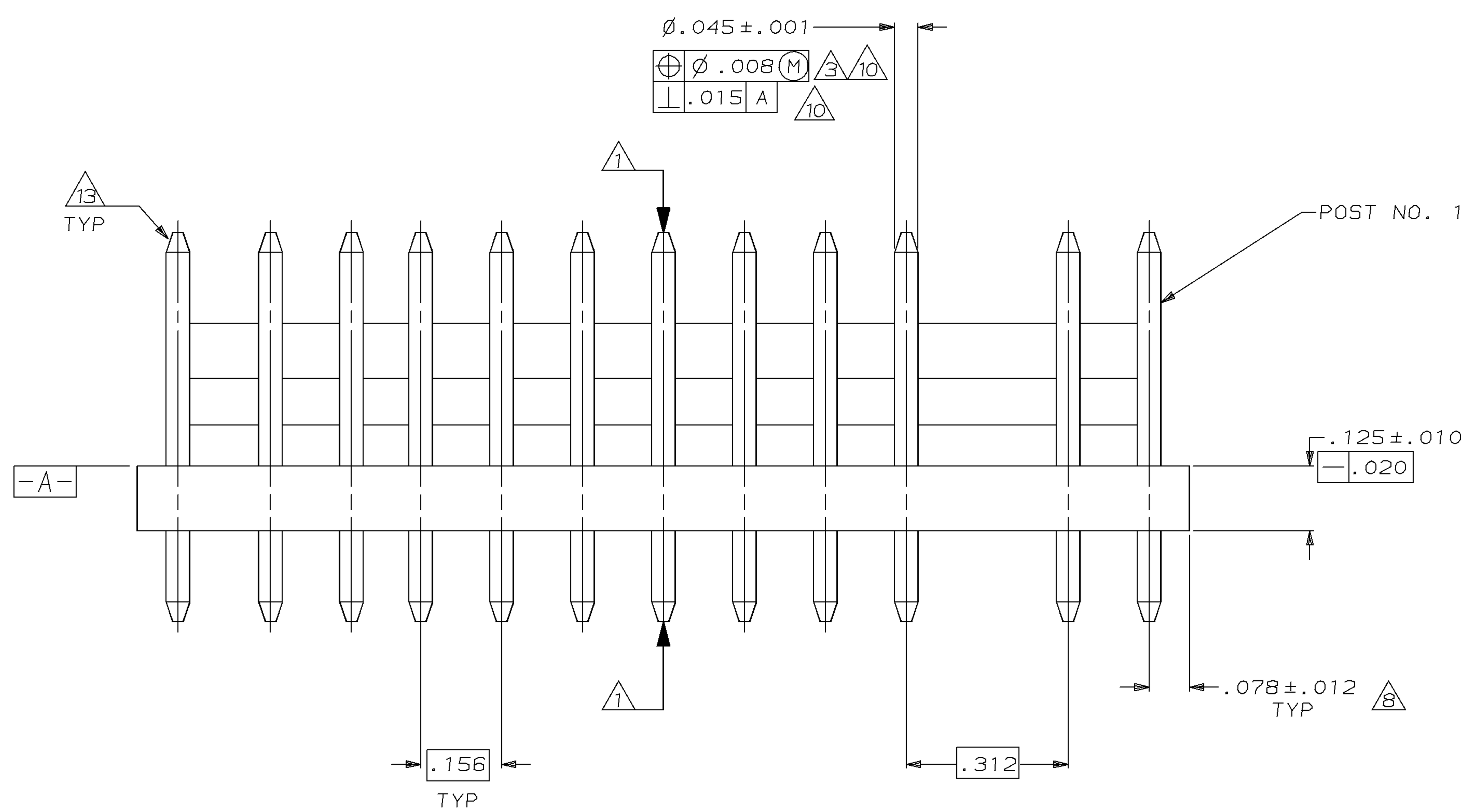


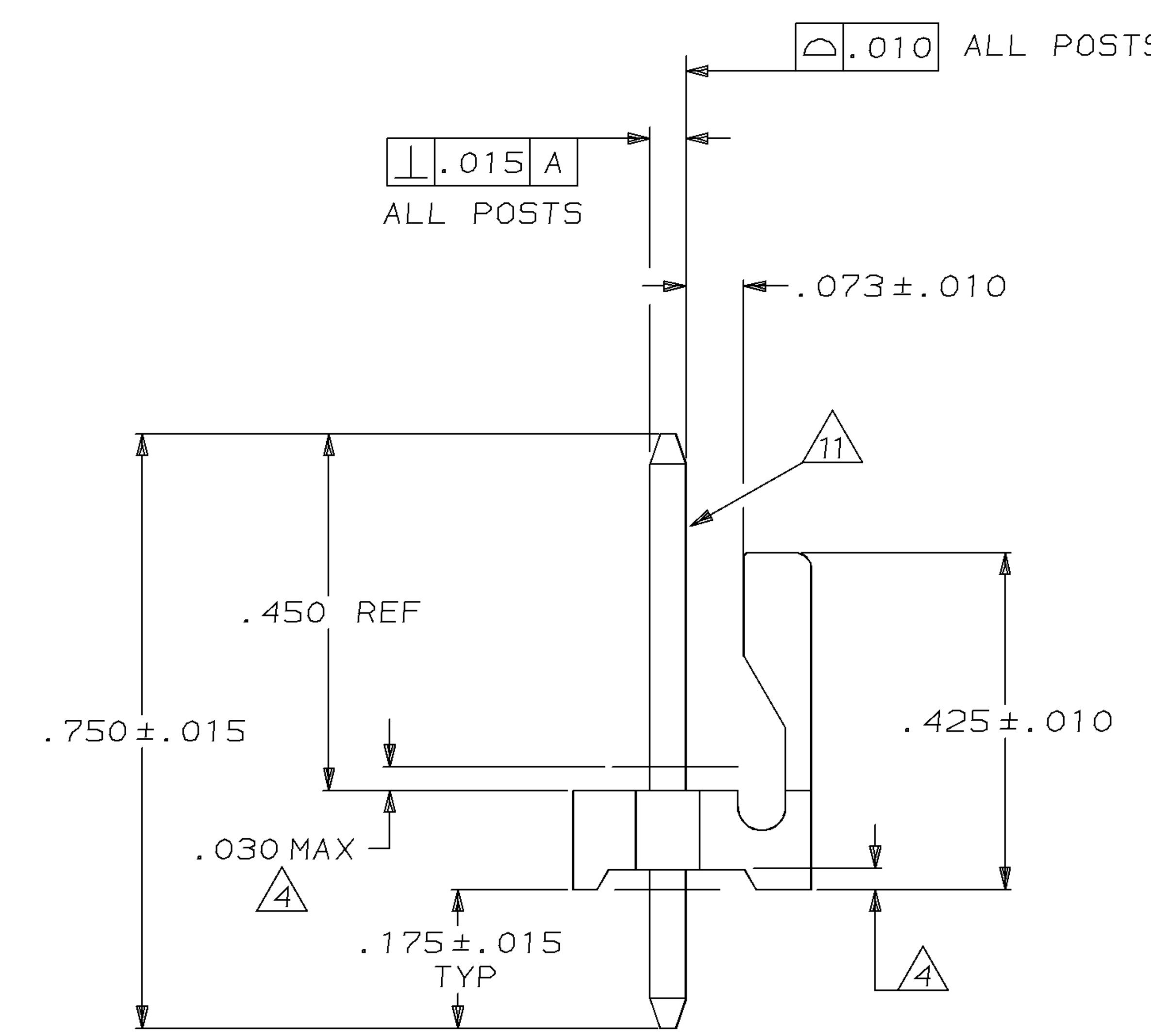


1. POST TO WITHSTAND 13 NEWTONS (3LBS.) MIN. AXIAL FORCE IN BOTH DIRECTIONS SHOWN WITHOUT DISLODGING.
2. TOLERANCES APPLY TO SOLDER SIDE OF BOARD.
3. MEASURED AT SURFACE -A-
4. PLASTIC FLASH PERMITTED IN THIS AREA.
5. PARTS COMPLY WITH AMP SOLDERABILITY SPEC. NO. 109-11-2.
6. ONE HOLE MAY BE UNDERSIZED (.051/.046 DIA.) FOR ASSEMBLY RETENTION DURING WAVE SOLDERING.
7. MATERIAL: HEADER-THERMOPLASTIC POLYESTER GLASS-FILLED 94V-0(NATURAL)
   POST-COPPER ALLOY (TIN PLATED)
8. COORDINATE DIMENSION APPLIES FROM CENTER OF ACTUAL FEATURE.
9. PLASTIC BURRS CAUSED BY CUT-OFF TOOLING ARE PERMITTED WITHIN THE MAXIMUM TOLERANCE ENVELOPE.
10. POST TO BE MEASURED WHEN STRIP IS HELD FLAT.
11. POST MUST WITHSTAND TWO 90° BENDS AGAINST EXTRUSION WITHOUT BREAKING.
12. DIMENSION SHOULD BE .175 MIN WHEN MATING WITH A MTA 156 CONNECTOR ASSEMBLY OR A SL-156 CONNECTOR ASSEMBLY.
13. PIN BURR OF .005 MAX. VERTICAL AND .003 MAX. HORIZONTAL PERMITTED AT POST TIPS ON BOTH ENDS.

| POST NUMBER OMITTED | PART NUMBER |
|---|---|
| 2, 7 & 9 | 644409-2 |
| 3 | 644409-1 |

644409-1 SHOWN

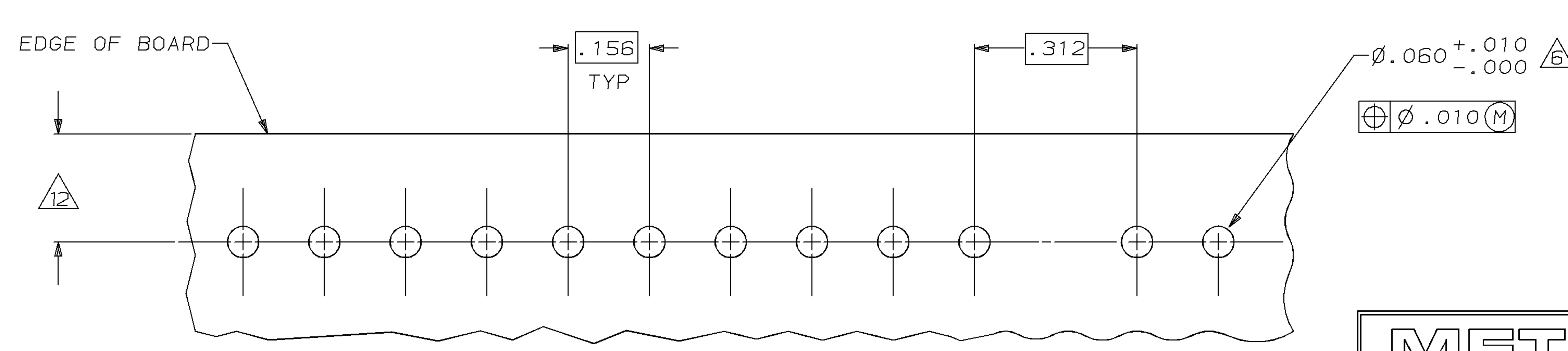


RECOMMENDED MOUNTING HOLE PATTERN FOR .063 THICK P.C. BOARD (2)

| | | | |
|---|---|---|---|
| .060 | 1.52 | 2.028 | 51.51 |
| .051 | 1.30 | .750 | 19.05 |
| .046 | 1.17 | .450 | 11.43 |
| .045 | 1.14 | .425 | 10.80 |
| .030 | 0.76 | .312 | 7.92 |
| .020 | 0.51 | .300 | 7.62 |
| .015 | 0.38 | .180 | 4.57 |
| .012 | 0.30 | .175 | 4.45 |
| .010 | 0.25 | .156 | 3.96 |
| .008 | 0.20 | .125 | 3.18 |
| .005 | 0.13 | .078 | 1.98 |
| .003 | 0.08 | .073 | 1.85 |
| .001 | 0.03 | .063 | 1.60 |
| IN | MM | IN | MM |

CONVERSION TABLE

METRIC

THIS DRAWING IS A CONTROLLED DOCUMENT FOR AMP INCORPORATED. IT IS SUBJECT TO CHANGE AND THE CONTROLLING ENGINEERING ORGANIZATION SHOULD BE CONTACTED FOR THE LATEST REVISION.

DO NOT SCALE PRINT.
UNLESS SPECIFIED
DIMENSIONS IN mm [INCHES]
TOLERANCES ON :
2 PLC DEC ± -
3 PLC DEC ± .005
ANGLES ± -

MATERIAL: 7 -
FINISH: 7

DR 10-22-92 N. GANNON
CHK 10-22-92 R. SWING
APPD 11-10-92 R. SPEER
APPD 11-10-92 R. SPEER
PRODUCT SPEC -
APPLICATION SPEC -
WEIGHT -

PART NO

AMP — AMP Incorporated, Harrisburg, PA 17105-3608

NAME: MTA-156 HEADER ASSEMBLY, FRICTION LOCK, STRAIGHT .045 ROUND POST, TIN PLATED, 13 POSITION, OMITTED POST

SIZE D | CAGE CODE 00779 | DRAWING NO C-644409
SCALE 5:1 | SHEET 1 OF 1

CUSTOMER DRAWING

AMP 1756-3 REV 3-92

A/C BUSINESS GROUP 3323 177-34 RALPH VESTAL

2D

17 MAY 1994 14:43:16 AMP33887 <CE079B>DEPT3323>AMP33887>U.CM-92